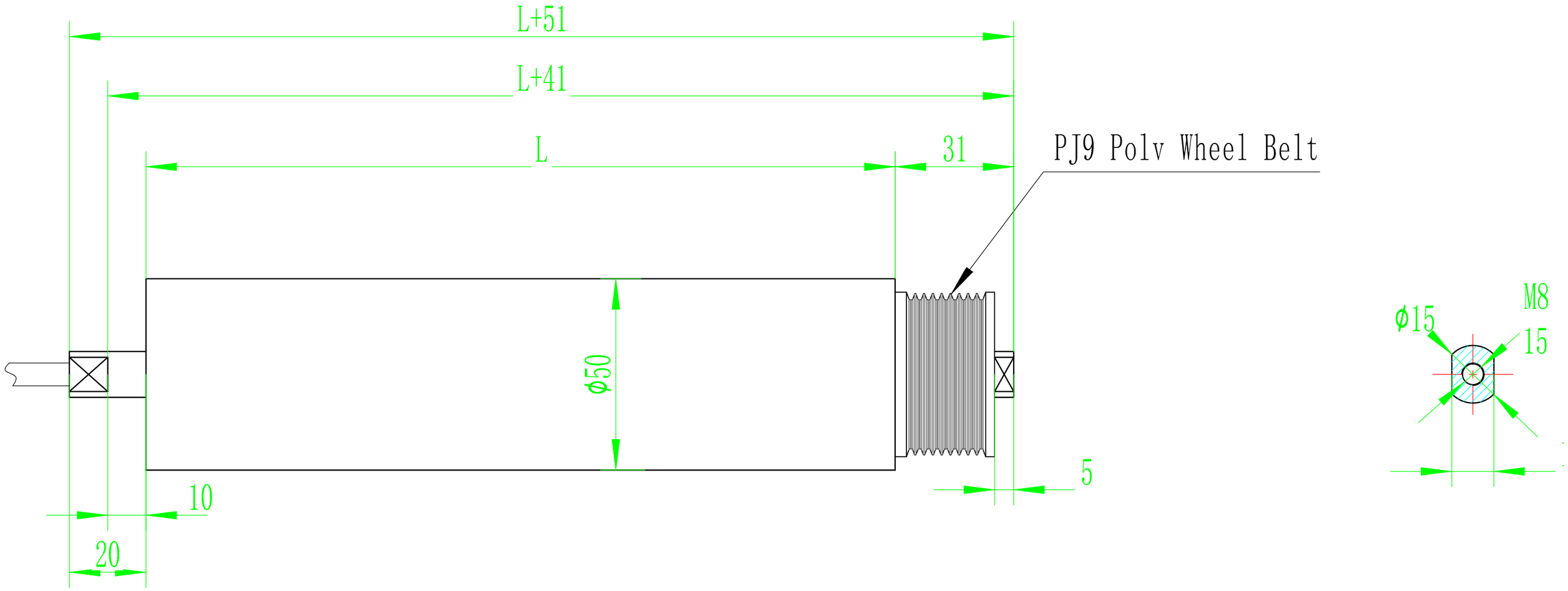
L+51
L+41
L
31
PJ9 Polv Wheel Belt
ϕ50
5
10
20
ϕ15
M8
15